DWG. NO. SD-51004-**00

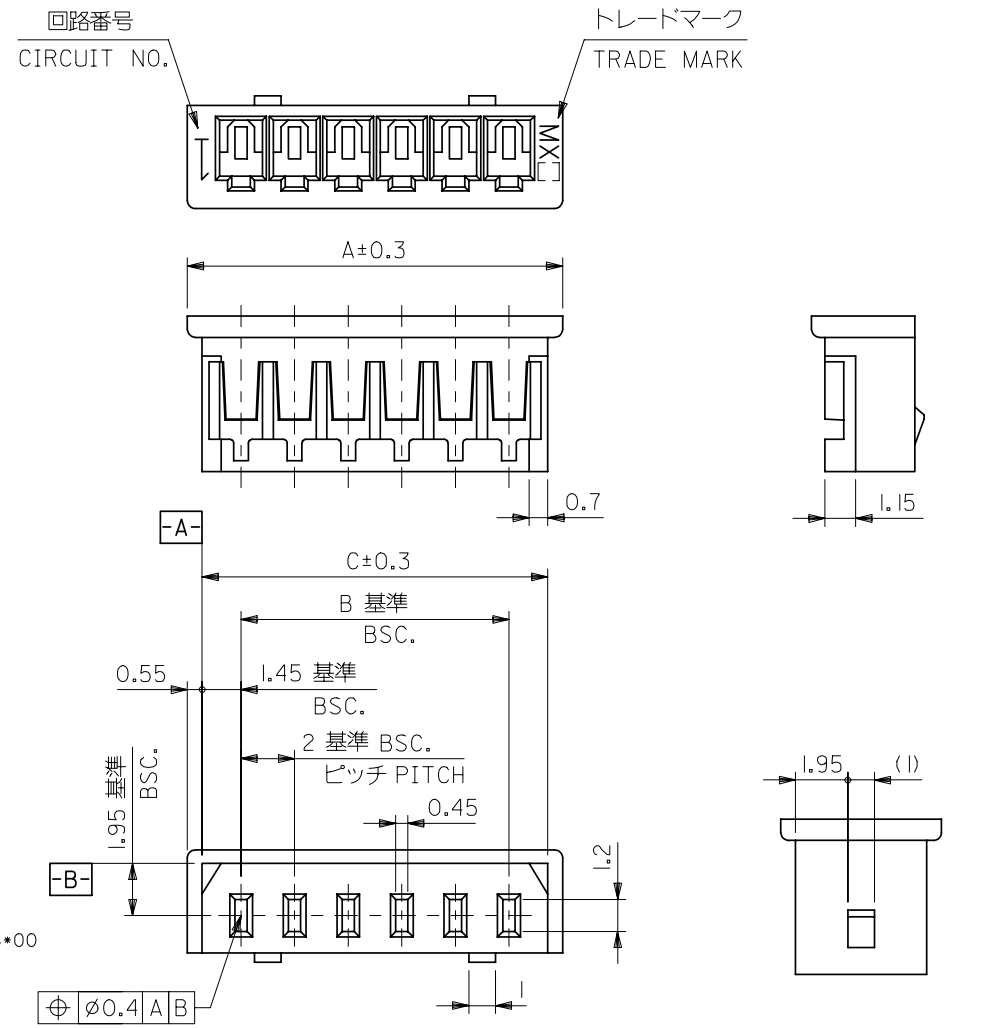

2極の場合
IN CASE OF 2 CIRCUIT HSG.

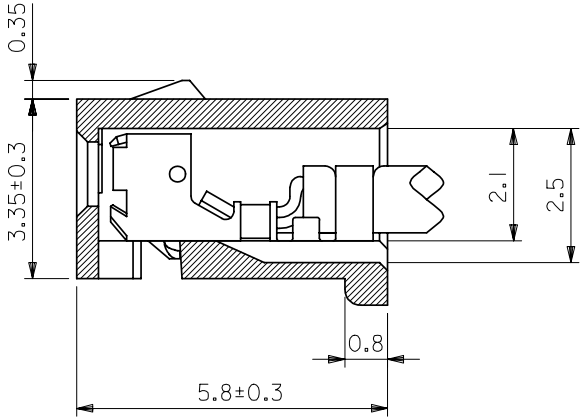

ターミナル装着状態
TERMINAL ASSEMBLY DRAWING
(10:1)

注)
NOTE.
1. 適合ターミナル：50011-8*00
ACCEPTS TERMINAL
2. 嵌合相手：53014-**10
MATES WITH 53015-**10
53025-**10

A	C	B	ENG.NO.	極数 CIRCUIT
32	30.9	28	51004-1500	15
30	28.9	26	-1400	14
28	26.9	24	-1300	13
26	24.9	22	-1200	12
24	22.9	20	-1100	11
22	20.9	18	-1000	10
20	18.9	16	-0900	9
18	16.9	14	-0800	8
16	14.9	12	-0700	7
14	12.9	10	-0600	6
12	10.9	8	-0500	5
10	8.9	6	-0400	4
8	6.9	4	-0300	3
6	4.9	2	51004-0200	2

DO NOT SCALE DRAWING

EC NO. DRWN: CH'K: APPR:	EC NO. DRWN: CH'K: APPR:	EC NO. DRWN: CH'K: APPR:	EC NO. DRWN: CH'K: APPR:	REDRAWN EC NO. JC2000-0629 DRWN: K.KOHAMA '00/ 3/28 CH'K: T.YAMAGUCHI '00/ 3/30 APPR: M.FUKUSHIMA '00/ 3/30	DESCRIPTION
				G	REV

MATERIAL 材料: PBT. UL94V-0 POLYESTER UL94V-0

FINISH 仕上げ: —//—

WIRE RANGE 適用電線範囲: —//—

INS. RANGE 被覆外径: —//—

GENERAL TOLERANCES: (UNLESS SPECIFIED) 一般公差

10 UNDER 未満	±0.2
10 OVER 以上 30 UNDER 未満	±0.25
30 OVER 以上	±0.3
ANGLE 角度	±3°

SCALE 5:1 | DESIGN UNITS ☒mm ☐INCH | THIRD ANGLE PROJECTION | DIMENSIONS: ☐mm/INCH ☐INCH/mm ☒mm ONLY | SHT | REV | REVISE ON CAD ONLY

DRAWN BY & DATE K.KOHAMA '00/ 3/28
CHECKED BY & DATE T.YAMAGUCHI '00/ 3/30
APPROVED BY & DATE M.FUKUSHIMA '00/ 3/30

TITLE: 2.0 LOW-PRO REC. HSG.

molex MOLEX INCORPORATED

CAD FILENAME S51004.S01 | MATERIAL NO. 51004-**00 | DRAWING NO. SD-51004-**00 | SHEET NO. 1

THIS DRAWING CONTAINS INFORMATION THAT IS PROPRIETARY TO MOLEX INCORPORATED AND SHOULD NOT BE USED WITHOUT WRITTEN PERMISSION.

SIZE B

S51004.S01

EN-02J(097) MXJ-54